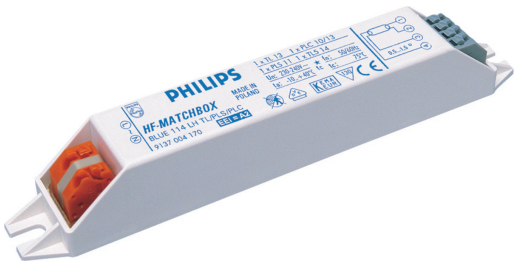

HF-Matchbox Blue

HF-M BLUE 109 LH TL/PL-S 230-240V

HF-Matchbox Blue is an affordable, reliable, compact, lightweight and high-frequency ballast for use with system wattages below 25 W in combination with TL mini, TL-D, TL5 and TL5c, PL-T/C, and PL-L/S lamps.The HF-M Blue range has a robust design, meets all relevant international safety and performance standards and has an energy efficiency index (CELMA EEI) of A2.;The ballast is primarily designed for Indoor application. For outdoor application, the luminaire should be minimum ClassIand need to be sufficiently protected against water & dust. The installation should also be guard against any lightening surge or any other necessary electrical protection as deemed in such typical installation & application.

Product data

General Information	
Lamp Type	TL/PL-S
Number of Lamps	1 piece/unit
Number of Products on MCB (16A Type B) (Nom)	159
Automatic Restart	Yes

Operating and Electrical	
Input Voltage	230 to 240 V
Input Frequency	50 to 60 Hz
Power Factor 100% Load (Nom)	0.64
Ignition Time (Max)	0.5 s
Mains Voltage Performance (AC)	-8%-+6%
Mains Voltage Safety (AC)	-10%-+10%
Power Losses (Nom)	1.7 W

Wiring	
Connector Type Input Terminals	Insert
Color Input Terminals	Blue
Color Output Terminals	Grey
Connector Type Output Terminals	Insert
Cable Length From Device to Lamp	1.50 m
Cable Length Hot Wiring	0.30 m
Wire Striplength	8.0-9.0 mm
Input Terminal Cross Section	0.50-1.50 mm²
Output Terminal Cross Section	0.50-1.50 mm²

System characteristics	
Rated Ballast-Lamp Power	9 W
System Power on PL-S	9.5 W
Rated Lamp Power on PL-S	9 W
Power Loss on PL-S	1.7 W
Lamp Power on PL-S	7.8 W
Lamp Power on TL	8.2 W
Rated Lamp Power on TL	9 W

HF-Matchbox Blue

System Power on TL	10.1 W

Temperature

T-Ambient (Max)	40 °C
T-Ambient (Min)	-10 °C
T-Case Maximum (Max)	75 °C

Mechanical and Housing

Housing	LH

Emergency Operation

Battery Voltage Lamp Ignition	194-254 V

Approval and Application

IP Classification	IP 20 [Ingress Protection 20]
Approval Marks	F-Marking CE marking VDE certificate CB Certificate

Product Data

Full product code	871150053680830
Order product name	HF-M BLUE 109 LH TL/PL-S 230-240V
EAN/UPC - Product	8711500536808
Order code	913700421366
Numerator - Quantity Per Pack	1
Numerator - Packs per outer box	50
Material Nr. (12NC)	913700421366
Net Weight (Piece)	0.036 kg

Dimensional drawing

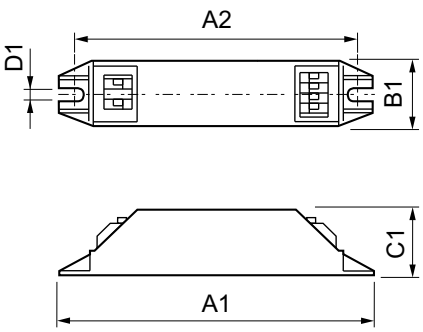

HF-M BLUE 109 LH TL/PL-S 230-240V

Product
HF-M BLUE 109 LH TL/PL-S 230-240V

© 2020 Signify Holding All rights reserved. Signify does not give any representation or warranty as to the accuracy or completeness of the information included herein and shall not be liable for any action in reliance thereon. The information presented in this document is not intended as any commercial offer and does not form part of any quotation or contract, unless otherwise agreed by Signify. Philips and the Philips Shield Emblem are registered trademarks of Koninklijke Philips N.V.